For Earth, For Life

Kubota

TRACTOR & RTV SNOW IMPLEMENTS

BX | B01 | LX | L60LE/L60 | RTV

TABLE OF CONTENTS

		PAGE #
	BX Series	3-10
	B01 Series	11-16
	LX Series	17-22
	L60LE / L60 Series	23-32
	Utility Vehicles	33-44

BX SERIES

BX Snow Implements

Kubota 4-Point Quick Connect Front Hitch
Part Number: BX2810

Quickly connect or disconnect front PTO-driven attachments with the easy-to-use 4-Point Quick Connect Front Hitch

Requirements:
- Mid Mount Mower Decks and Bracing must be removed to install hitch

50" Two Stage Residential Snow Blower
Part Number: BX2816

New 2 stage residential snowblower with manual chute rotation and manual chute deflection, chain reduction, 4-blade impeller

Requirements:
- BX2810 Quick Hitch
- BX2811 Mid PTO Driveline
- BX2417 Loader Valve (if not equipped)

Available Accessories:
- BX2818A Hydraulic Chute Rotation
- BX2819A Electric Chute Rotation Kit
- BX2820A Electric Chute Deflector Kit
- BX2821A Hydraulic Chute Deflector Kit
- BX2817 Hard Plastic Shoes and Cutting Edge
- GR2714 Drift Cutters

48" Two Stage Commercial Snow Blower
Part Number: BX2830

Commercial snowblower with abrasion resistant housing and impeller, hydraulic chute rotation and manual chute deflector. Equipped with replacable and reversible carbon steel cutting edge.

Requirements:
- BX2810 Quick Hitch
- BX2811 Mid PTO Driveline
- BX2417 Loader Valve (if not equipped)

Available Accessories:
- BX2820A Electric Chute Deflector Kit
- BX2821A Hydraulic Chute Deflector Kit
- BX2831 Hard Plastic Shoes and Cutting Edge
- BX5447 Drift Cutters

60" Heavy Duty Rotary Sweeper with Hyd. Angle
Part Number: BX2812A

Commercial sweeper featuring 24" polypropylene brush wafers, hydraulic angling, oscillation and angulation functions

Requirements:
- BX2810 Quick Hitch
- BX2811 Mid PTO Driveline
- BX2417 Loader Valve (if not equipped)

Available Accessories:
- BX2815 Dust Deflector Kit

60" Blade - Hyd. Angle
Part Number: BX2814A

Reinforced heavy-duty snow blade with improved curvature, hydraulic angling, reversible cutting edge

Requirements:
- BX2810 Quick Hitch
- BX2417 Loader Valve (if not equipped)

Available Accessories:
- BX2825 Skid Shoes
- BX2813 Rubber Edge

50" Two Stage Residential Snow Blower
Part Number: BX2816

New 2 stage residential snowblower with manual chute rotation and manual chute deflection, chain reduction, 4-blade impeller

Requirements:
- BX2810 Quick Hitch
- BX2811 Mid PTO Driveline
- BX2417 Loader Valve (if not equipped)

Available Accessories:
- BX2818A Hydraulic Chute Rotation
- BX2819A Electric Chute Rotation Kit
- BX2820A Electric Chute Deflector Kit
- BX2821A Hydraulic Chute Deflector Kit
- BX2817 Hard Plastic Shoes and Cutting Edge
- GR2714 Drift Cutters

48" Two Stage Commercial Snow Blower
Part Number: BX2830

Commercial snowblower with abrasion resistant housing and impeller, hydraulic chute rotation and manual chute deflector. Equipped with replacable and reversible carbon steel cutting edge.

Requirements:
- BX2810 Quick Hitch
- BX2811 Mid PTO Driveline
- BX2417 Loader Valve (if not equipped)

Available Accessories:
- BX2820A Electric Chute Deflector Kit
- BX2821A Hydraulic Chute Deflector Kit
- BX2831 Hard Plastic Shoes and Cutting Edge
- BX5447 Drift Cutters

55" Two Stage Commercial Snow Blower
Part Number: BX2822A

Commercial snowblower with hydraulic chute rotation and manual chute deflection, oil bath reduction gear box.
NOTE: This snowblower is not compatible with the BX1880

Requirements:
- BX2810 Quick Hitch
- BX2811 Mid PTO Driveline
- BX2417 Loader Valve (if not equipped)

Available Accessories:
- BX2820A Electric Chute Deflector Kit
- BX2821A Hydraulic Chute Deflector Kit
- BX2823 Hard Plastic Shoes and Cutting Edge
- BX5447 Drift Cutters

60" Heavy Duty Rotary Sweeper with Hyd. Angle
Part Number: BX2814A

B3410 QH Mounted Only Commercial sweeper featuring 24" polypropylen brush wafers, hydraulic angling, oscillation and angulation functions

Requirements:
- BX2810 Quick Hitch
- BX2811 Mid PTO Driveline
- BX2417 Loader Valve (if not equipped)

Available Accessories:
- BX2815 Dust Deflector Kit

BX2380 / BX2680 / BX23S

60" Blade - Hyd. Angle
Part Number: BX2812A

Reinforced heavy-duty snow blade with improved curvature, hydraulic angling, reversible cutting edge

Requirements:
- BX2810 Quick Hitch
- BX2417 Loader Valve (if not equipped)

Available Accessories:
- BX2825 Skid Shoes
- BX2813 Rubber Edge

4-Point Quick Connect Front Hitch for "-1" Models

Part Number: B3410

Quickly connect or disconnect front PTO-driven attachments with the easy-to-use 4-Point Quick Connect Front Hitch

Requirements:

- B3412 Grill Guard Tilt Kit on Tractors w/ Grill Guard

50" Two Stage Residential Snow Blower
Part Number: BX2816

New 2 stage residential snowblower with manual chute rotation and manual chute deflection, chain reduction, 4-blade impeller

Requirements:
- B3410 Quick Hitch
- B2412 Grill Guard Tilt Kit
- B3411 Mid PTO Driveline
- BX2842 Completion Kit - (BX2842 not compatible with Mower Deck Linkage)

Available Accessories:
- BX2818A Hydraulic Chute Rotation
- BX2819A Electric Chute Rotation Kit
- BX2820A Electric Chute Deflector Kit
- BX2821A Hydraulic Chute Deflector Kit
- BX2817 Hard Plastic Shoes and Cutting Edge
- GR2714 Drift Cutters

48" Two Stage Commercial Snow Blower
Part Number: BX2830

Commercial snowblower with abrasion resistant housing and impeller, hydraulic chute rotation and manual chute deflector. Equipped with replacable and reversible carbon steel cutting edge.

Requirements:
- B3410 Quick Hitch
- B2412 Grill Guard Tilt Kit
- B3411 Mid PTO Driveline

Available Accessories:
- BX2820A Electric Chute Deflector Kit
- BX2821A Hydraulic Chute Deflector Kit
- BX2831 Hard Plastic Shoes and Cutting Edge
- BX5447 Drift Cutters

55" Two Stage Commercial Snow Blower
Part Number: BX2822A

Commercial snowblower with hydraulic chute rotation and manual chute deflection, oil bath reduction gear box. Equipped with a replacable and reversible carbon steel cutting edge.

Requirements:
- B3410 Quick Hitch
- B3412 Grill Guard Tilt Kit
- B3411 Mid PTO Driveline

Available Accessories:
- BX2820A Electric Chute Deflector Kit
- BX2821A Hydraulic Chute Deflector Kit
- BX2823 Hard Plastic Shoes and Cutting Edge
- BX5447 Drift Cutters

60" Heavy Duty Rotary Sweeper with Hyd. Angle
Part Number: BX2814A

B3410 QH Mounted Only
Commercial sweeper featuring 24" polypropylen brush wafers, hydraulic angling, oscillation and angulation functions

Requirements:
- B3410 Quick Hitch
- B3411 Mid PTO Driveline
- B1982 Loader Control Valve

Available Accessories:
- BX2815 Dust Deflector Kit

60" Blade - Hyd. Angle

Part Number: BX2812A

B3410 QH Mounted Only
Reinforced heavy-duty snow blade with improved curvature, hydraulic angling, reversible cutting edge

Requirements:
- B3410 Quick Hitch
- B1982 Loader Control Valve

Available Accessories:
- BX2825 Skid Shoes
- BX2813 60" Rubber Cutting Edge

LX SERIES

LX Snow Implements

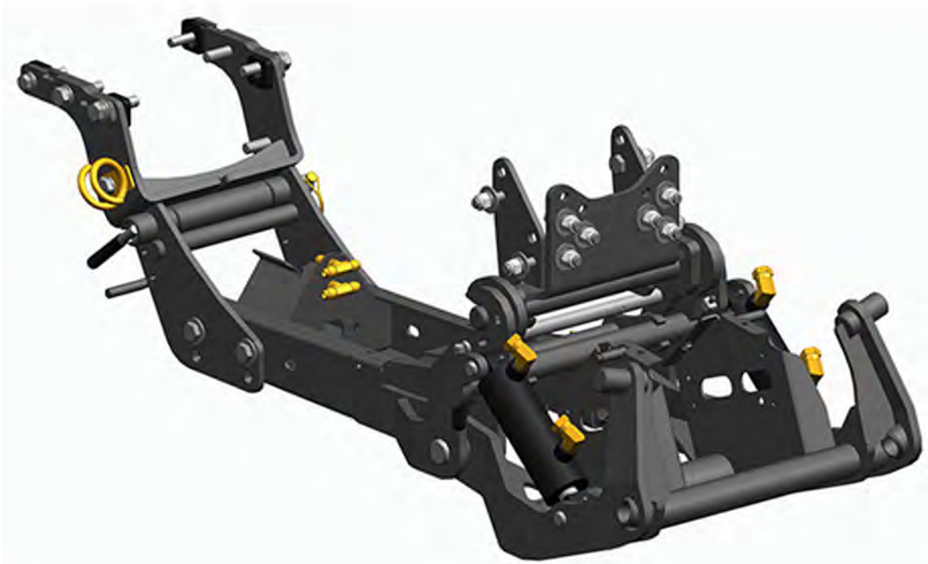

Quick Hitch and Sub-Frame
Part Number: LX2940

Quickly connect or disconnect front PTO-driven attachments with the easy-to-use 4-Point Quick Connect Front Hitch

Requirements:
- B2726 required if no FEL Sub-Frame is installed
- LX2953 required with LA535 non-MSL loader installed
- LX2954 required for LA535 MSL applications

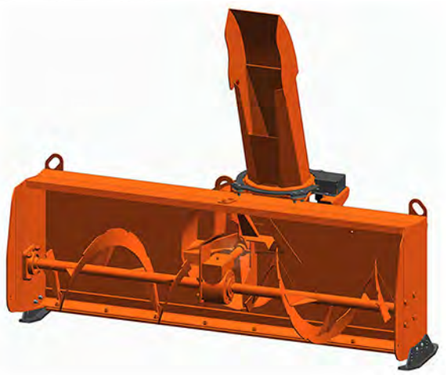

63" Residential 2-Stage Snowblower
Part Number: LX2963

Features: Gearbox reduction assembled, hydraulic chute rotation and manual chute deflection
NOTE: Not compatible with the LX2610SUHD Model

Requirements:
• LX2940 Front Hitch
NOTE: B2729 Quick Hitch Support Kit required if no FEL Subframe installed
NOTE: LX2953 Hose Holder Kit required if non-MSL FEL installed
NOTE: LX2954 T-Fitting Kit required if MSL FEL installed
• LX2942 K Connect Module required for operation

Available Accessories:
• BL7522 Hydraulic Chute Deflector
• BX5447 Drift Cutters
• LX2943 Hard Plastic Cutting Edge & Adjustable Skid Shoes

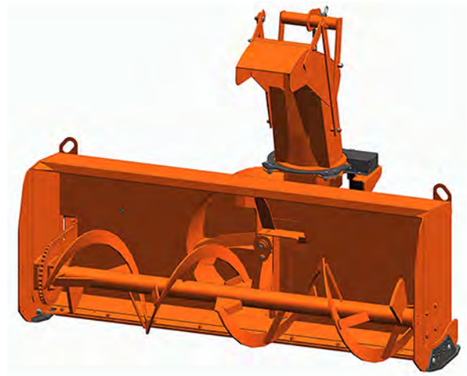

64" Commercial 2-Stage Snowblower
Part Number: LX2980

Features: oilbath reduction gearboxes, hydraulic chute rotation, manual deflection, abrasion resistant housing and impeller
NOTE: Not compatible with the LX2610SUHD Model

Requirements:
• LX2940 Front Hitch
NOTE: B2729 Quick Hitch Support Kit required if no FEL Subframe installed
NOTE: LX2953 Hose Holder Kit required if non-MSL FEL installed
NOTE: LX2954 T-Fitting Kit required if MSL FEL installed
• LX2942 K Connect Module required for operation

Available Accessories:
• BL7522 Hydraulic Chute Deflector
• BL7524 Drift Cutters
• LX2945 Hard Plastic Cutting Edge & Adjustable Skid Shoes
• B2799 3" Side Extension Kit

51" Commercial 2-Stage Snowblower
Part Number: LX2970

Features: oilbath reduction gearboxes, hydraulic chute rotation, manual deflection, abrasion resistant housing and impeller
NOTE: Not compatible with the LX2610SUHD Model

Requirements:
• LX2940 Front Hitch
NOTE: B2729 Quick Hitch Support Kit required if no FEL Subframe installed
NOTE: LX2953 Hose Holder Kit required if non-MSL FEL installed
NOTE: LX2954 T-Fitting Kit required if MSL FEL installed
• LX2942 K Connect Module required for operation

Available Accessories:
• BL7522 Hydraulic Chute Deflector
• BL7524 Drift Cutters
• LX2944 Hard Plastic Cutting Edge & Adjustable Skid Shoes
• B2799 3" Side Extension Kit

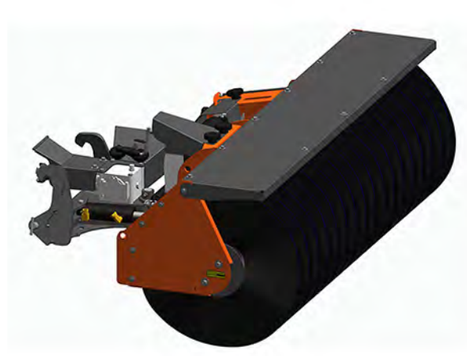

66" Rotary Sweeper
Part Number: LX2950

Features: Parking stands, hydraulic angling with 1 cylinder, hoses with nylon sleeves and couplers
NOTE: Not Compatible with the LX2610SUHD Model

Requirements:
• LX2940 Front Hitch
NOTE: B2729 Quick Hitch Support Kit required if no FEL Subframe installed
NOTE: LX2953 Hose Holder Kit required if non-MSL FEL installed
NOTE: LX2954 T-Fitting Kit required if MSL FEL installed
• LX2942 K Connect Module required for operation

Available Accessories:
• V5269 50/50 Poly and Steel Brush Kit
• V5250 Side Markers (Flexible Rods)
• LX2951 Dust Deflector

LX2610HSD / LX3310HSD

60" HD Snow Blade
Part Number: LX2960

Features: Trip spring lockout, 1 hydraulic angling cylinder, HD double bevel cutting edge and skid shoes

Requirements:
• LX2940 Front Hitch
NOTE: B2729 Quick Hitch Support Kit required if no FEL Subframe installed
NOTE: LX2953 Hose Holder Kit required if non-MSL FEL installed
NOTE: LX2954 T-Fitting Kit required if MSL FEL installed
• LX2942 K Connect Module required for operation

Available Accessories:
• B2776 72" Rubber Cutting Edge

72" HD Snow Blade
Part Number: LX2972

Features: Trip spring lockout, 1 hydraulic angling cylinder, HD double bevel cutting edge and skid shoes

Requirements:
• LX2940 Front Hitch
NOTE: B2729 Quick Hitch Support Kit required if no FEL Subframe installed
NOTE: LX2953 Hose Holder Kit required if non-MSL FEL installed
NOTE: LX2954 T-Fitting Kit required if MSL FEL installed
• LX2942 K Connect Module required for operation

Available Accessories:
• B2776 72" Rubber Cutting Edge

L60LE/L60 SERIES

L60LE/L60 Snow Implements

Manual-Hitch
Part Number: L4455A

Quickly connect or disconnect front attachments with the easy-to-use 4-Point Quick Connect Front Hitch. Does not include Driveline Completion Kit.

Available Accessories:
- L4481 - Required if the grille guard is desired. **(Grille guard must be purchased separately)**
- L4483 - Driveline Completion Kit for L3560 Tractor
- L4484 - Driveline Completion Kit for L4060-L6060 Tractor (Included in L4554A Auto Hitch Kit)
- L4456 - GPR - Ground Pressure Relief System (Requires L4449 - install on L4455(A) Manual Hitch)
- L4449 - GPR Hose Kit & Control Box (Requires install L4456 (GPR) on L4455(A) Manual Hitch)

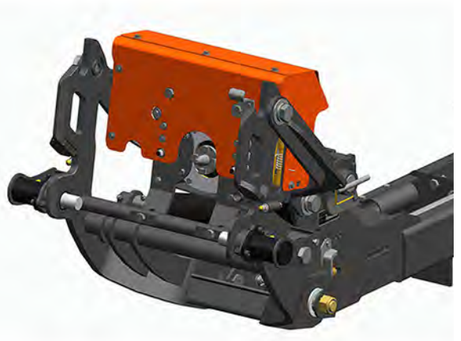

Auto-Hitch - Equipped with Auto Module
Part Number: L4554A

Auto-Hitch - Equipped with Auto Module that quickly connects or disconnects front attachments with the easy-to-use 4-Point Quick Connect Front Hitch. Includes 4 Cylinder Driveline Completion Kit.

Available Accessories:
- L4481 - Required if the grille guard is desired. (Grille guard must be purchased separately)

For 3 Cylinder Models, also order Part #70001-00623 **(do not order the entire 3 Cylinder Driveline Completion Kit L4483)**
- L4483 - Driveline Completion Kit for L3560 Tractor
- L4484 - Driveline Completion Kit for L4060-L6060 Tractor (Included in L4554A Auto Hitch Kit)
- L4456 - GPR - Ground Pressure Relief System (Requires L4449 install on L4455(A) Manual Hitch)
- L4449 - GPR Hose Kit & Control Box (Requires install L4456 (GPR) on L4455(A) Manual Hitch)

L3560 / L4060 / L4760 / L5060 / L5460 / L6060

L60LE/L60 Snow Implements

62" Two-Stage Utility Snowblower for L3560 Only

Part Number: L2194A

The L2194A 62" Two-Stage Utility Snowblower. Includes Blower and Chute Rotator
NOTE: L3560 Only

Requirements:
- L8387 Mid PTO Kit (ROPS models also require L8316)
- L4483 Driveline Kit (L3560 Tractor)
- L4455A Manual Quick Hitch **OR** L4554A Auto Quick Hitch
- L4431 (Manual, L4455A) **OR** L4432 (Auto, L4554A) Completion Kit
- L4445 Adapter Kit

Available Accessories:
- L2177 Width Extension Kit, adds 5" overall cut
- BL2666A Hydraulic Chute Deflector Kit (Includes Electric Selector Valve)

64" Two-Stage Utility Snowblower for L3560 Only

Part Number: L4469

The L4469 64" Two-Stage Utility Snowblower features a oil bath gearbox, 3 part chute with manual chute deflector, hydraulic chute rotation by motor, hydraulic flow restrictors and couplers
NOTE: L3560 Only

Requirements:
- L8387 Mid PTO Kit (ROPS models also require L8316)
- L4483 Driveline Kit (L3560 Tractor) L4455A Manual Quick Hitch **OR** L4554A Auto Quick Hitch
- L4431 (Manual, L4455A) **OR** L4432 (Auto, L4554A) Completion Kit

Available Accessories:
- L2177 Width Extension Kit, adds 5" overall cut
- BL2666A Hydraulic Chute Deflector Kit (Includes Electric Selector Valve)

74" Two-Stage Utility Snowblower for all Grand L60 Models

Part Number: L4479

The L4479 74" Two-Stage Utility Snowblower features a HD oil bath gearbox, 3 part chute with manual chute deflector, hydraulic chute roation with motor, hydraulic flow restrictors and couplers

Requirements:
- L8387 Mid PTO Kit (ROPS models also require L8316)
- L4483 Driveline Kit (L3560 Tractor)
- L4484 Driveline Kit (L4060-L6060 Tractor if ordering L4455A)
- L4455A Manual Quick Hitch **OR** L4554A Auto Quick Hitch
- L4431 (Manual, L4455A) **OR** L4432 (Auto, L4554A) Completion Kit

Available Accessories:
- L2177 Width Extension Kit, adds 5" overall cut
- BL2666A Hydraulic Chute Deflector Kit (Includes Electric Selector Valve)
- L4445 Snowblower Adapter Kit (Required to convert L2194A or LA2195A)

74" Commercial Snowblower for L4760-L6060 Models

Part Number: L4474

The L4474 74" Commercial Snowblower features a HD oil bath gearbox, 3 part chute with manual chute deflector, hydraulic chute rotation with motor, hydraulic flow restrictors and couplers
NOTE: L4760-L6060 Models Only

Requirements:
- L8387 Mid PTO Kit (ROPS models also require L8316)
- L4484 Driveline Kit (L4060-L6060 Tractor if ordering L4455A)
- L4455A Manual Quick Hitch OR L4554A Auto Quick Hitch
- L4433 (Manual, L4455A) OR L4434 (Auto, L4554A) Completion Kit

Available Accessories:
- L2470 74" Teflon Cutting Edge for Commercial Snowblowers
- L2471 80" Teflon Cutting Edge for Commercial Snowblowers

NOTE: L4456 is highly recommended (L4449 is also required with L4455A)

L3560 / L4060 / L4760 / L5060 / L5460 / L6060

L60LE/L60 Snow Implements

80" Commercial Snowblower for L4760-L6060 Models
Part Number: L4485

The L4485 80" Commercial Snowblower features a HD oil bath gearbox, 3 part chute with manual chute deflector, hydraulic chute rotation with motor, hydraulic flow restrictors and couplers
NOTE: L4760-L6060 Models Only

Requirements:
- L8387 Mid PTO Kit (ROPS models also require L8316)
- L4484 Driveline Kit (L4060-L6060 Tractor if ordering L4455A)
- L4455A Manual Quick Hitch OR L4554A Auto Quick Hitch
- L4433 (Manual, L4455A) OR L4434 (Auto, L4554A) Completion Kit

Available Accessories:
- L2471 80" Teflon Cutting Edge for Commercial Snowblowers

NOTE: L4456 is highly recommended (L4449 is also required with L4455A)

64" Two-Stage Commercial Snowblower
Part Number: BLMX3164

The BLMX3164 64" Two-Stage Commercial Snowblower features a 3 point hitch, ASAE compatible Cat 1, oil bath gearbox, 2-part chute, single auger, and 4 blade fan

Requirements:
- BL2665 Manual Rotator Chute OR BL6399 Hydraulic Chute Rotator

NOTE: BL6399 Hydraulic Chute Rotator requires 1 set of Hydraulic Remote Valves

Available Accessories:
- BL2666A Hydraulic Chute Deflector Kit (Requires Hydraulic Chute Rotator)
- B2516A Electric Chute Deflector
- L2177 Width Extension Kit, adds 5" overall cut

74" Two-Stage Commercial Snowblower
Part Number: LMX3174

The LMX3174 74" Two-Stage Commerical Snowblower features a 3 Point Hitch, ASAE Compatible Cat. 1, oil bath gearbox, 2-part chute, single auger, and 4 blade fan

Requirements:
- BL2665 Manual Rotator Chute OR BL6399 Hydraulic Chute Rotator

NOTE: BL6399 Hydraulic Chute Rotator requires 1 set of Hydraulic Remote Valves

Available Accessories:
- BL2666A Hydraulic Chute Deflector Kit (Requires Hydraulic Chute Rotator)
- B2516A Electric Chute Deflector
- L2177 Width Extension Kit, adds 5" overall cut

60" Rotary Broom w/22" Diameter for L3560 Only
Part Number: L4467

The L4467 60" Rotary Broom features a 22" Diameter, standard power angle, and includes a Hitch Lift Limiter
NOTE: L3560 Only

Requirements:
Requirements:
- L8387 Mid PTO Kit (ROPS models also require L8316)
- L4483 Driveline Kit (L3560 Tractor)
- L4455A Manual Quick Hitch **OR** L4554A Auto Quick Hitch
- L4431 (Manual, L4455A) **OR** L4432 (Auto, L4554A) Completion Kit

Available Accessories:
- BL2178 Side Caster Wheel
- L2168 60" Rubber Dust Deflector

L60LE/L60 Snow Implements

72" Rotary Broom w/22" Diameter for all Grand L60 Models
Part Number: L4477

The L4477 72" Rotary Broom features a 22" wafer brushes, hydraulic angling, adjustable suspension and parking stands

Requirements:
- L8387 Mid PTO Kit (ROPS models also require L8316)
- L4483 Driveline Kit (L3560 Tractor)
- L4484 Driveline Kit (L4060-L6060 Tractor if ordering L4455A)
- L4455A Manual Quick Hitch **OR** L4554A Auto Quick Hitch
- L4431 (Manual, L4455A) **OR** L4432 (Auto, L4554A) Completion Kit

Available Accessories:
- BL2178 Side Caster Wheel
- L2169 72" Rubber Dust Deflector

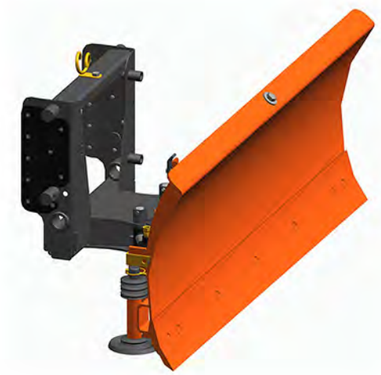

60" Front Blade for L3560 Only
Part Number: L4466

The L4466 60" Front Blade features a trip spring lockout, HD double bevel heat-treated, HD skid shoes, hydraulic angling with 2 cylinders, hoses & quick couplers
NOTE: L3560 Only

Requirements:
- L4455A Manual Quick Hitch **OR** L4554A Auto Quick Hitch
- L4482 Blade Completion Kit for Installation on L4554A Hitch

Available Accessories:
- B2766 60" Front Blade Rubber Cutting Edge

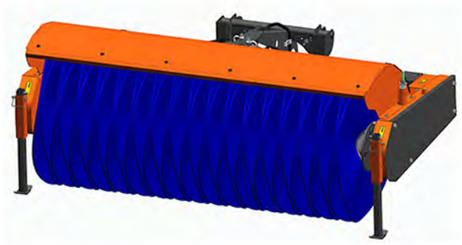

72" Commercial Rotary Broom for L4060-L6060 Models
Part Number: L4556

72" Commercial Rotary Broom for L4060-L6060 Models

Requirements:
- L8387 Mid PTO Kit (ROPS models also require L8316)
- L4484 Driveline Kit (L4060-L6060 Tractor if ordering L4455A)
- L4455A Manual Quick Hitch **OR** L4554A Auto Quick Hitch
- L4488 (Manual, L4455A) OR L4475 (Auto, L4554A) Completion Kit

Available Accessories:
- L4535 72" Dust Deflector Kit
- L4514 Lawn Dethatching Kit

72" Front Blade for all Grand L60 Models
Part Number: L4476

The L4476 72" Front Blade features a trip spring lockout, HD double bevel heat-treated, HD skid shoes, hydraulic angling with 2 cylinders, hoses & quick couplers

Requirements:
- L4455A Manual Quick Hitch **OR** L4554A Auto Quick Hitch
- L4482 Blade Completion Kit for Installation on L4554A Hitch

Available Accessories:
- B2776 72" Front Blade Rubber Cutting Edge

L3560 / L4060 / L4760 / L5060 / L5460 / L6060

72" Front Blade for all Grand L60 Models
Part Number: L2172

The L2172 72" Front Blade is a heavy duty blade designed for commercial use
Hydraulic power angle is a standard feature

Requirements:
- L4455A Manual Quick Hitch OR L4554A Auto Quick Hitch
- L4482 Blade Completion Kit for Installation on L4554A Hitch
- L4446 Blade Adapter Kit

84" Front Blade, Hyd. Lift and Angle for L4060-L6060 Models
Part Number: L4486

The L4486 84" Front Blade is a heavy duty blade designed for commercial use
Hydraulic power angle is a standard feature

Requirements:
- L4455A Manual Quick Hitch OR L4554A Auto Quick Hitch
- L4482 Blade Completion Kit for Installation on L4554A Hitch

Available Accesories:
- L2777 84" Front Blade Rubber Cutting Edge

RTV500 / 520 SERIES

RTV500 / 520 Snow Implements

60" Front Blade

Part Number: V4308A

Includes electric lift w/ manual angle

Available Accessories:

- V4305 Standard Replacement Cutting Edge
- V4306 Heavy Duty Cutting Edge
- V4307 Snow Deflector

RTV-XG850 Sidekick Snow Implements

72" General Duty Front Blade

Part Number: V5008

- 72" wide general purpose snow blade with 19" moldboard height and 12 gauge moldboard thickness
- 64.5" plow width @ 30° max angle
- Electric lift with manual angle adjustment

Requirements:

- K7591-97200 Bumper for install.
- K7591-99180 HD Front Springs

RTV-X SERIES

RTV-X Snow Implements

72" General Duty Front Blade
Part Number: V5008

MODELS: RTV-X900 / RTV-X1120 / RTV-X1100 / RTV-X1140

• 72" wide general purpose snow blade with 19" moldboard height and 12 gauge moldboard thickness
• 64.5" plow width @ 30° max angle
• Electric lift with manual angle adjustment

Requirements:
• K7591-99180* Front Heavy Duty Strut Kit **OR** K7591-99190* Front Heavy Duty Spring Kit
***RTV-X900 & RTV-X1120 Only**

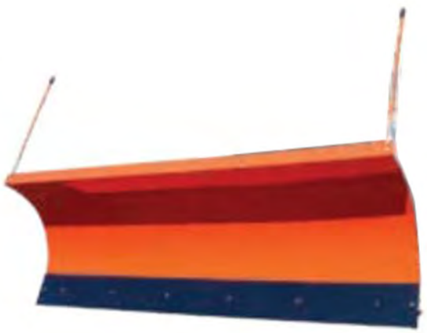

72" XTRA Duty Front Blade
Part Number: V5060

MODELS: RTV-X900 / RTV-X1120 / RTV-X1100 / RTV-X1140

72" wide heavy duty snow blade with 23.5" moldboard height and 12 gauge moldboard thickness. 64.5" plow width @ 30° max angle. Includes self contained electro-hydraulics for lift and angle adjustment

Requirements:
• K7591-99180* Front Heavy Duty Strut Kit or K7591-99190* Front Heavy Duty Spring Kit
***RTV-X900 & RTV-X1120 Only**

RTV-X900 / RTV-X1120 / RTV-X1100 / RTV-X1140 RTV-X Snow Implements

72" Commercial Straight Blade
Part Number: V5290

MODELS: RTV-X900 / RTV-X1120 / RTV-X1100 / RTV-X1140

• 72" wide commercial snow blade with 21.75" moldboard height and 10 gauge moldboard thickness
• 62.4" plow width @ 30° max angle
• Hydraulic lift with down pressure and float
• Hydraulic angle adjustment with adjustable blade trip springs

Requirements:
• V5289 Front Quick Hitch
• V5232 Electro-Hydraulic Valve Kit
• V5271 Auxiliary Hydraulic Pump (X900)
• V5272 Auxiliary Hydraulic Pump (X1120/X1100)

Available Accessories:
• V5250 Marker Kit
• 77700-V5255 Front Grill Guard Adapter

78" Straight Blade
Part Number: V5294A

MODELS: RTV-X1120 / RTV-X1100 / RTV-X1140

• 78" wide K-connect snow blade with 24" moldboard height and 0.075" moldboard thickness
• 68" plow width @ 30° max angle covers the width of the RTV-X
• Hydraulic lift with down pressure and float
• Hydraulic angle adjustment with two spring trip protection

Requirements:
• V5293B 4 Point K-Connect
• K7591-99180 Front Heavy Duty Strut Kit **OR** K7591-99190 Front Heavy Duty Spring Kit (X1120 Only)

Available Accessories:
• V5281 Curb Guards
• V5285 Skid Shoes
• V5298 4 Pt Hitch Upgrade Kit
• 77700-V5278 Front Guard Adapter Kit
• V5287 Rubber Cutting Edge
• V5288 Plastic Cutting Edge

72" V-Plow Front Blade
Part Number: V5291

MODELS: RTV-X900 / RTV-X1120 / RTV-X1100 / RTV-X1140

• 72" wide V-Blade (straight) with moldboard height 19 1/8" @ center, 20 1/2" @ ends, and 3/8" moldboard thickness
• 66" V position width and 59" scoop position width
• Hydraulic lift with down pressure and float
• Hydraulic angle adjustment with built-in relief valves to protect against impact
• Trip cutting edges

Requirements:
• V5289 Front Quick Hitch
• V5232 Electro-Hydraulic Valve Kit
• V5233 3rd Function Valve Kit
• V5271 Auxiliary Hydraulic Pump (X900)
• V5272 Auxiliary Hydraulic Pump (X1120/X1100)

Available Accessories:
• V5250 Marker Kit
• V5256 V-Blade Curb Guard Kit
• 77700-V5255 Front Grill Guard Adapter

78" V-Blade
Part Number: V5295A

MODELS: RTV-X1120 / RTV-X1100 / RTV-X1140

• 78" wide K-connect V-blade (straight) with moldboard height 20" @ center, 25 3/4" @ ends, and 0.075" moldboard thickness
• 69 1/2" V position width and 66" scoop position width
• Hydraulic lift with down pressure and float
• Hydraulic angle adjustment with built-in relief valves to protect against impact
• Trip cutting edges

Requirements:
• V5293B 4 Point K-Connect
• K7591-99180 Front Heavy Duty Strut Kit or K7591-99190 Front Heavy Duty Spring Kit (X1120 Only)

Available Accessories:
• V5281 Curb Guards
• V5285 Skid Shoes
• V5298 4 Pt Hitch Upgrade Kit
• 77700-V5278 Front Guard Adapter Kit
• V5284 Plastic Cutting Edge

60" Rotary Broom
Part Number: V5260

MODELS: RTV-X900 / RTV-X1120 / RTV-X1100 / RTV-X1140

Commercial Duty Rotary Broom Utilizing V5289 Quick Hitch

Requirements:
- V5289 Front Quick Hitch
- V5232 Electro-Hydraulic Valve Kit
- V5233 3rd Function Valve Kit
- V5271 Auxiliary Hydraulic Pump (X900)
- V5272 Auxiliary Hydraulic Pump (X1120/X1100)
- V5240 Oil Cooler Kit
- V5245 Hand Throttle Kit
- V5261 RTV-X1140 Oil Cooler Adapter Kit (X1140 only)

66" Commercial Snowblower
Part Number: V5296

MODELS: RTV-X1120 / RTV-X1100

- 66" wide PTO driven 2-stage commercial snowblower with hydraulic chute rotation and deflection
- 16" fan with 4 blades
- Skid shoes and drift cutters are standard

Requirements:
- V5293B 4 Point K-Connect
- V5299B PTO Drive K-Connect
- K7591-99180 Front Heavy Duty Strut Kit **OR** K7591-99190 Front Heavy Duty Spring Kit (X1120 Only)

Available Accessories:
- V5298 4 Pt Hitch Upgrade Kit
- 77700-V5278 Front Guard Adapter Kit
- V5297 Plastic Cutting Edge w/ skid shoes

66" Rotary Broom
Part Number: V5266

MODELS: RTV-X1120 / RTV-X1100

- 66" wide PTO driven rotary broom with 24" diameter poly brushes
- 59 1/2" width @ 25° max angle
- Hydraulic lift and angle adjustment with 8 1/2 degree oscillation
- Floating wheels and markers standard

Requirements:
- V5293B 4 Point K-Connect
- V5299B PTO Drive K-Connect
- K7591-99180 Front Heavy Duty Strut Kit **OR** K7591-99190 Front Heavy Duty Spring Kit (X1120 Only)

Available Accessories:
- V5298 4 Pt Hitch Upgrade Kit
- 77700-V5278 Front Guard Adapter Kit
- V5269 50/50 Poly& Steel Brush Kit

Rock Salt Spreader
Part Number: V5002-A

MODELS: RTV-X900 / RTV-X1120 / RTV-X1100

- Ideal for winter applications with 3 cubic feet capacity (240 lbs) and spreading width up to 25 ft
- Electric powered motor and transmission controlled by a variable speed weatherproof controller
- Heavy duty poly hopper construction
- Top screen and fitted cover included

RTV-X900 / RTV-X1120 / RTV-X1100 / RTV-X1140 RTV-X Snow Implements

Tailgate Spreader
Part Number: V5003-A

MODELS: RTV-X900 / RTV-X1120 / RTV-X1100

• Ideal for year round use with 3 cubic feet capacity (240 lbs) and spreading width up to 20 ft
• Easy-to-calibrate for various materials (e.g. seed, fertilizer, bagged ice melt, and more)
• Electric powered motor and transmission controlled by a variable speed weatherproof controller
• Heavy duty poly hopper construction
• Top screen and fitted cover included

Cargo Box Spreader
Part Number: V5005

MODELS: RTV-X900 / RTV-X1120 / RTV-X1100 / RTV-X1140

• 11 cubic feet capacity (800 lbs) and spreading width up to 30 ft
• Electric powered motor and transmission with a dual controller for independent material
and spread width control
• Heavy duty poly hopper construction
• Top screen, fitted cover, and heavy duty vibrator included

Available Accessories:
• V4407 Spreader Control Tube

Drop Spreader
Part Number: V5004

MODELS: RTV-X900 / RTV-X1120 / RTV-X1100

• Ideal for sidewalk and precision applications with 6-cubic-foot material capacity (480 lbs) and 36-inch spread width
• Features a gateless design that will help minimize waste in between applications
• Digital, self-diagnosing variable-speed control and wire harness that is completely loomed with molded plugs.
• Sealed electric powered motor and transmission.
• Heavy duty poly hopper construction
• Top screen and fitted cover included